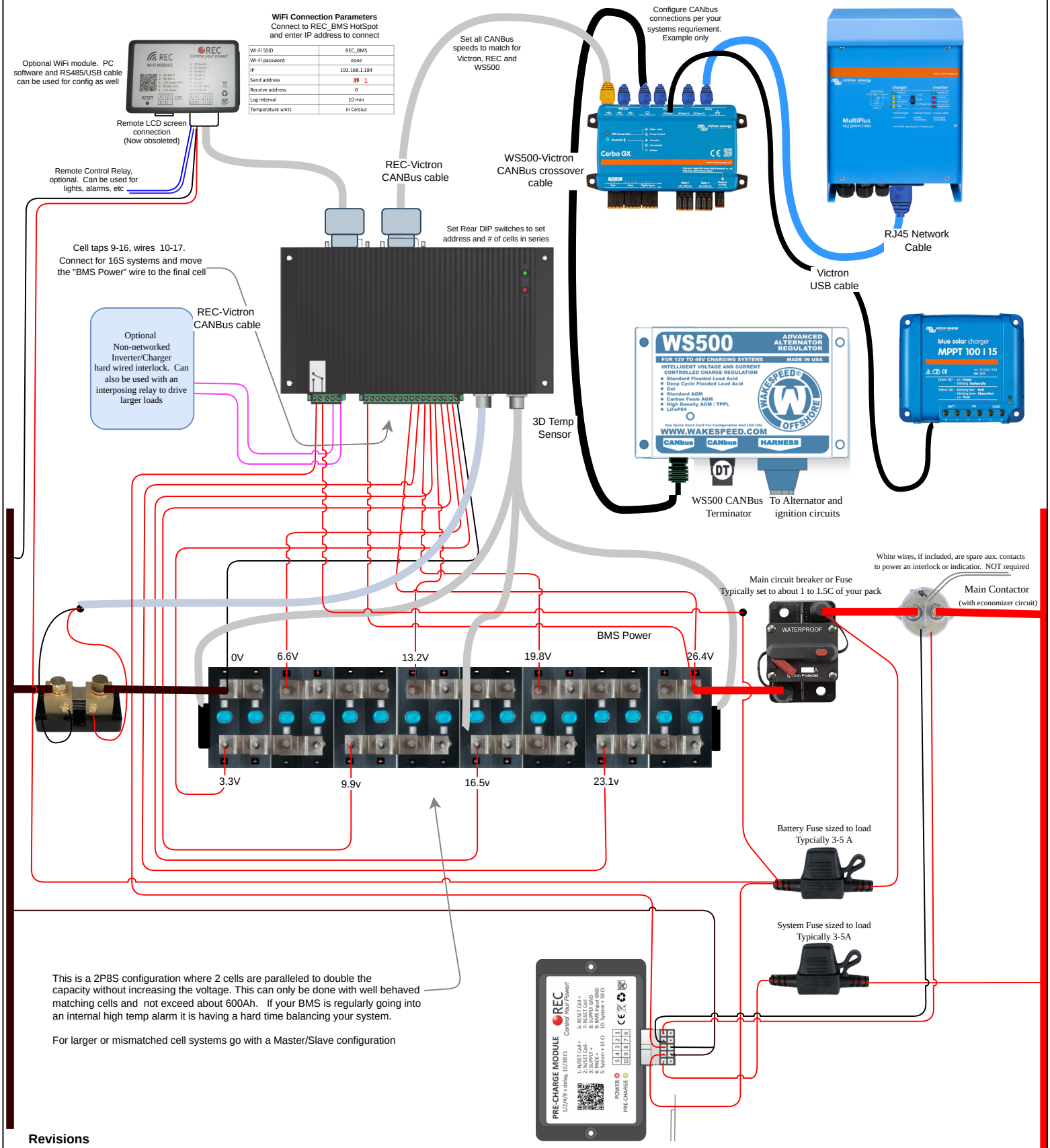

Revisions

Rev 1.0.1 Jan 28 Relocate BMS power wire terminal # 17
Rev 1.0.2 May 6, 2022 Flip System/Battery + wires on PreCharge Module
REv 1.0.3 January 23, 2023 Added 2P8S, new Precharge 3.0 and Wifi Module
REv 1.0.4 February 22, 2023 Added DIP switch settings

	OFF	ON	OFF	Single pole contactor/relay 4 s pre-charge time
	OFF	ON	ON	Single pole contactor/relay 8 s pre-charge time

Project:	Sample only
Drawing:	REC Q Series BMS 24V with Victron
Date:	February 22, 2023
Revision:	1.0.4