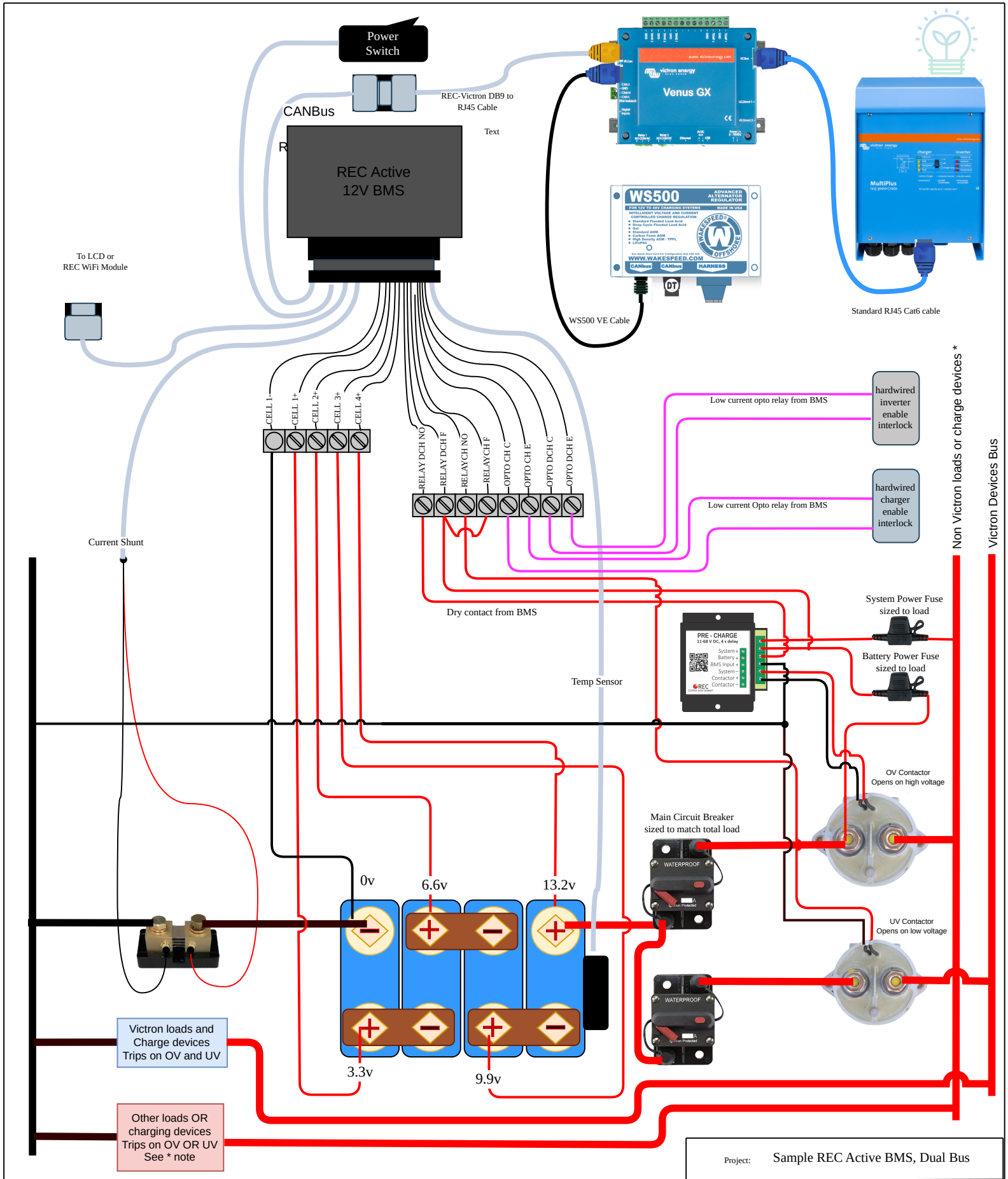

Revisions

1.0.1	Jan 24, 2022	Loads added and bus descriptions fixed
1.0.2	Jan 27, 2022	updated relay wires to match manual
1.0.2	Jul 16, 2023	updated relay wires to match new manual

* Set up CH relay using RE1H and RE1L settings to make this a UV or OV contactor

Project:	Sample REC Active BMS, Dual Bus
Drawing:	REC Active BMS dual UV OV Contactor
Date:	July 16, 2023
Revision:	1.0.3